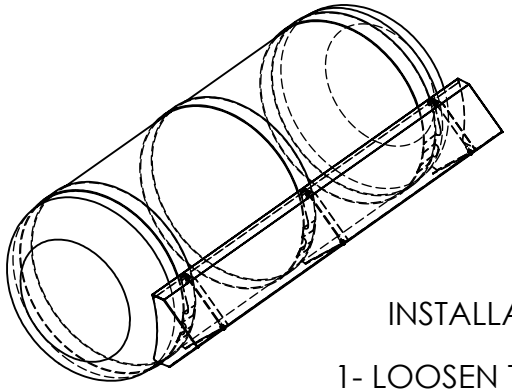

ON THIS VIEW THE SKIRT IS HIDDEN

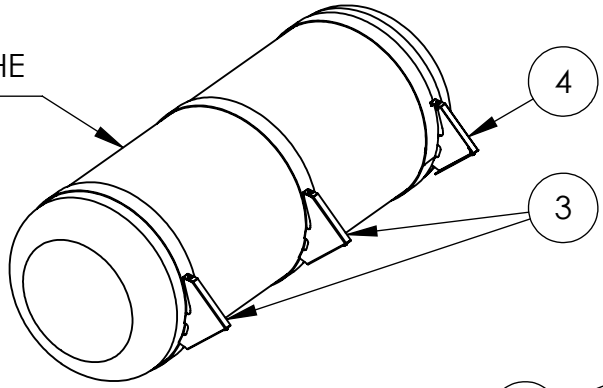

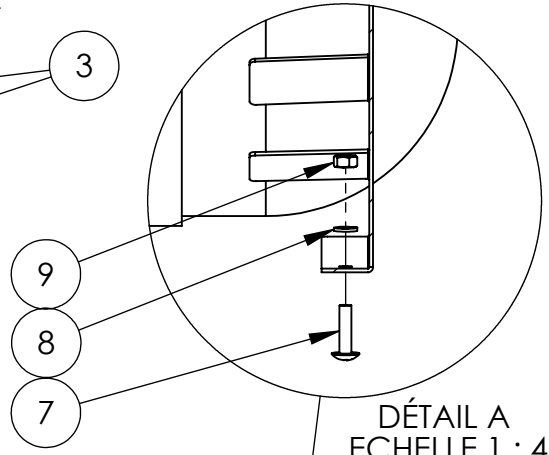

DÉTAIL A
ECHELLE 1 : 4

INSTALLATIOLN INSTRUCTION

1- LOOSEN THE STRAP OF THE TANK.
2- TO SLIDE THE SUPPORTS TONGUE BETWEEN THE RUBBER AND THE STRAP.
3- LIGHTLY TIGHTEN THE STRAP TO BE ABLE TO POSITION THE SUPPORTS.
4- INSTALL THE SKIRT ON THE SUPPORTS USED THE PROVIDED HARDWARE.
5- LAST CHECK TO THE SKIRT POSITION MAKE SURE IT'S OK.
6- TIGHTEN ALL BOLTS AND SCREWS.

ON THIS VIEW THE SKIRT IS HIDDEN

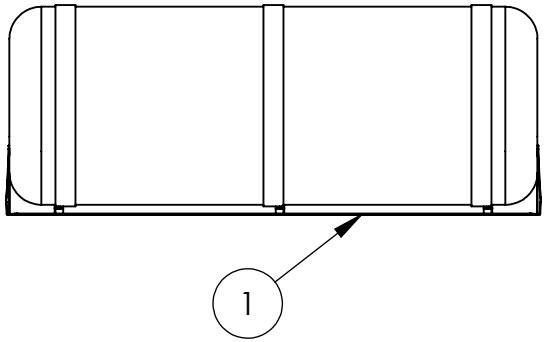

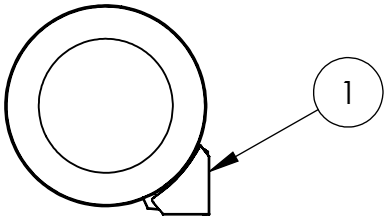

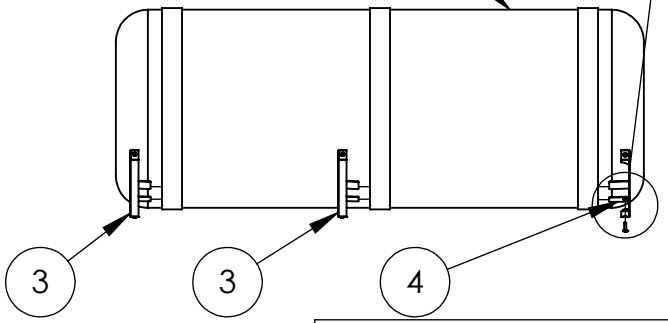

ITEM NO.	PART NO.	DESCRIPTION	QTY
1	-	FUEL TANK SKIRT	1
2	K7571000BH	HARDWARE KIT INCLUDES:	-
3	-	PR9271001-G00	2
4	-	PR9271001-D00	1
7	-	TRUSS PHILIPS 1/4-20NCX1"SS	6
8	-	LOCK WASHER 1/4" SS	6
9	-	HEX NUT 1/4-20NC	6

TRUX ACCESSORIES

TITLE:
FUEL TANK SKIRT

SIZE A | DWG. NO. **TK-1417 TK-1418 TK-1419**

	NAME	DATE	REV	DATE
DRAWN BY	-	-	PH1	-

SCALE: 1:24 | WEIGHT: LBS | SHEET: 1 OF 1